TT Mixflow

Installation Manual

fanco

Before installing your new Fanco exhaust fan, it is important that you read and follow these instructions prior to installation, even if you feel you are quite familiar with this type of product. Please keep this document handy for future reference as it contains servicing and maintenance requirements.

WARNING

Disconnect the fan from power mains prior to any connection, servicing and repair operations.

Mounting and maintenance are allowed for duly qualified electricians with valid electrical work permit for electric operations at the units up to 1000V after careful study of the present user's manual.

The single-phase power mains must comply with the acting local electrical norms and standards.

The fixed electrical wiring must be equipped with an automatic circuit breaker. The fan must be connected to power mains through an automatic circuit breaker QF integrated into the fixed wiring system with the gap between the breaker contacts on all poles not less than 3 mm.

Check the fan for any visible damages of the impeller and the casing before starting installation.

The casing internals must be free of any foreign objects which can damage the impeller blades.

Misuse of the device or any unauthorized modification is not allowed.

The fan is not to be used by children and persons with reduced physical, mental or sensory capacities, without proper practical experience or expertise, unless they are controlled or instructed on the product operation by the person(s) responsible for their safety.

Do not leave children unattended and do not let them play with the product.

Take steps to prevent ingress of smoke, carbon monoxide and other combustion products into the room through open chimney flues or other fire-protection devices. Sufficient air supply must be provided for proper combustion and exhaust of gases through the chimney of fuel burning equipment to prevent back drafting.

Transporting medium must not contain any dust or other solid impurities, sticky substances or fibrous materials.

Do not use the fan in the environment containing hazardous or explosive materials and vapours, i.e. spirits, gasoline, insecticides, etc.

Do not close or block the fan intake or extract vents in order to ensure the most effective air passage.

Do not sit on the fan and do not put objects on the fan.

Fulfil the requirements stated in this user's manual to ensure long service life of the product.

Recycle at the end of the service life.

Do not dispose the product with unsorted municipal trash.

The TT exhaust series described in this user's manual is a high-performance series of fans specifically designed for supply and exhaust ventilation of premises requiring high pressure, powerful air flow and low noise level.

.

DELIVERY SET

1. Fan: 1 piece

2. Dowel and screws: 4 pieces

3. Plastic screwdriver (for models with a timer): 1 piece

4. User's manual

5. Packing box

SHORT DESCRPTION

The product described here is a mixed-flow fan for supply or exhaust ventilation of premises.

The units are equipped with a two-speed motor.

The TT series of fans are designed for connection to Ø 100mm, 125mm and 150mm air ducts.

The TT Pro series of fans are designed for connection to Ø 200mm, 250mm and 315mm air ducts.

Some specific TT and TT Pro models feature a built-in three-position speed switch and power cord with an IEC C14 connector.

Due to constant improvements the design of some models may slightly differ from those ones described in this manual.

OPERATION RULES

The fan is designed for connection to AC 220-240 V, 50 Hz power mains.

Air flow direction in the system must match the pointer direction on the fan casing.

Ingress protection rating against access to hazardous parts and water ingress: IPX4

The fan is rated for operation at ambient temperatures ranging from +1°C to +45°C.

The minimum transported temperature for this fan is -15°C. The fan is suitable for short-term air transportation at a temperature reaching -30°C. The maximum transported temperature for this fan is +60°C.

The fan requires no grounding.

MOUNTING

The fan is suitable both for horizontal or vertical mounting on the floor, on the wall or on the ceiling (see step 1). The fan can be installed independently or as part of a set with parallel or in-series connection (see step 2). Install a minimum 1m of duct on the intake spigot side in case of horizontal fan mounting or a hood in case of vertical fan mounting. The outlet spigot must always be connected to the air duct.

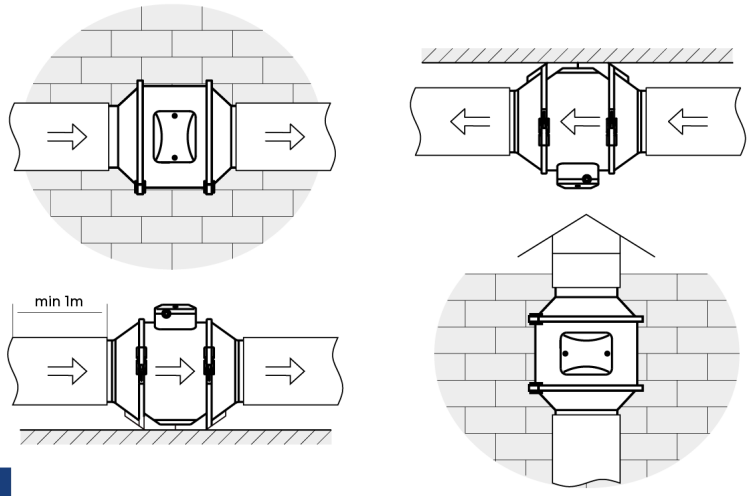

1.

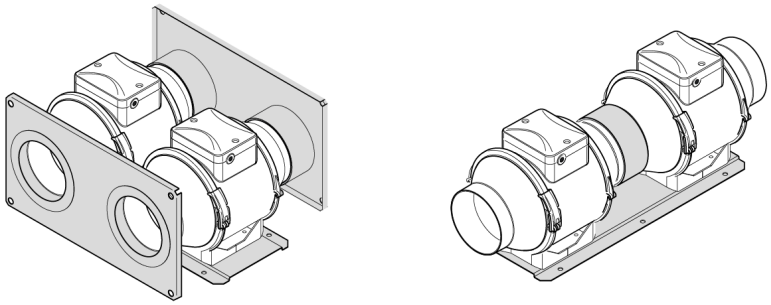

2.

STEP 1 - Cut off power supply and make preparations in the room to install a fan.

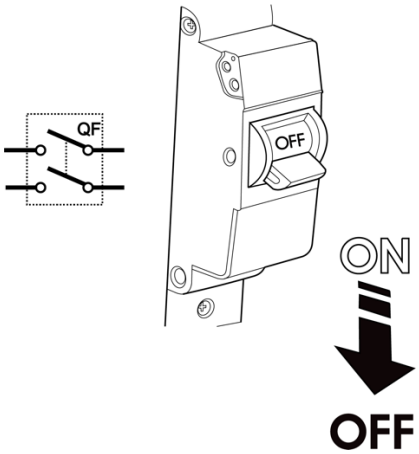

STEP 2 – Unscrew the screws on the special clamps with latches on the spigots. Pull out the removable central motor block housing the impeller and terminal box from the casing.

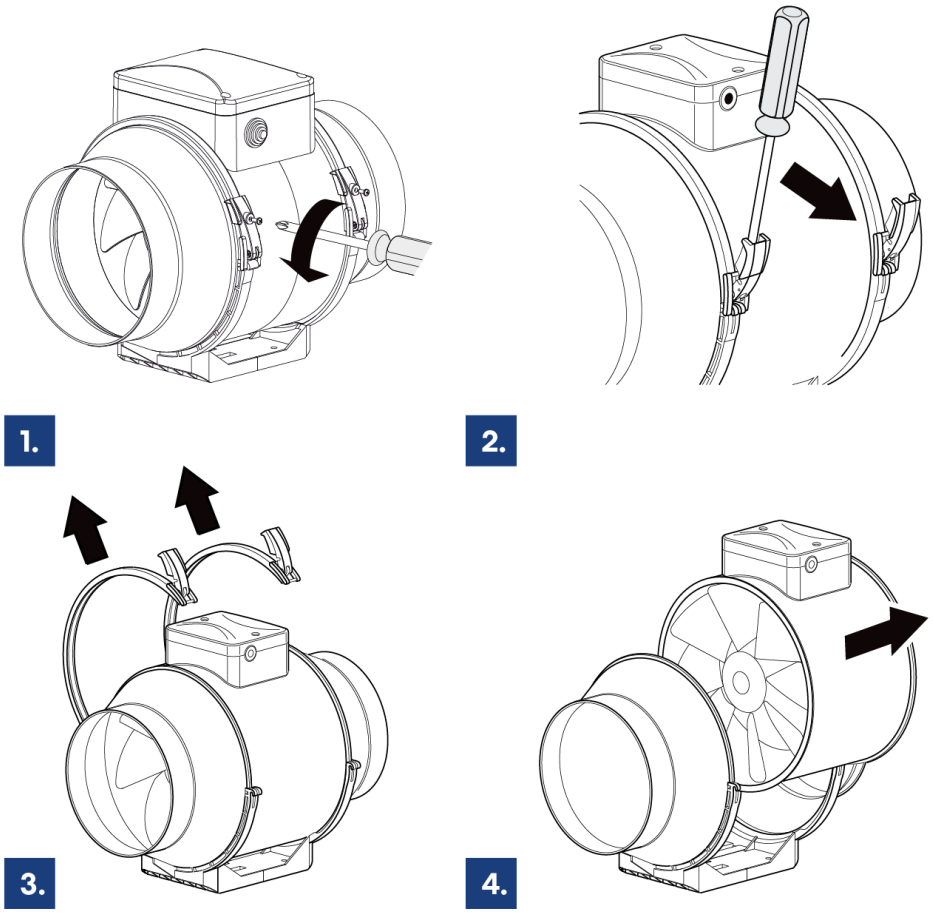

STEP 3 – Position the fan in your preferred installation location and mark the position of the holes on the fan where the screws will then be placed.

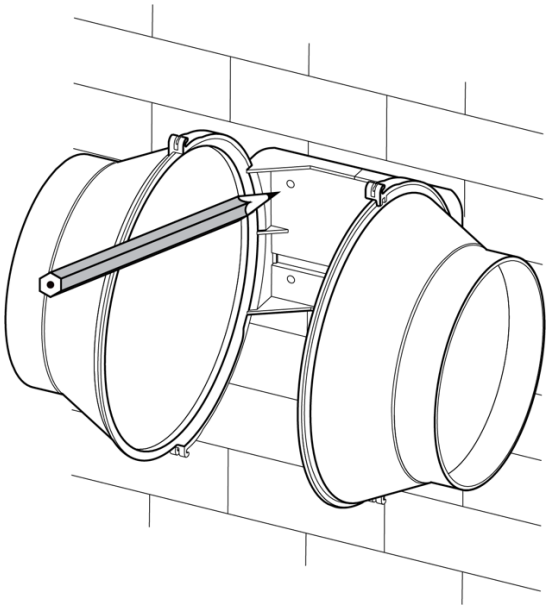

STEP 4 – Drill the holes in compliance with the mounting seats on the fan casing and install the fan with screws.

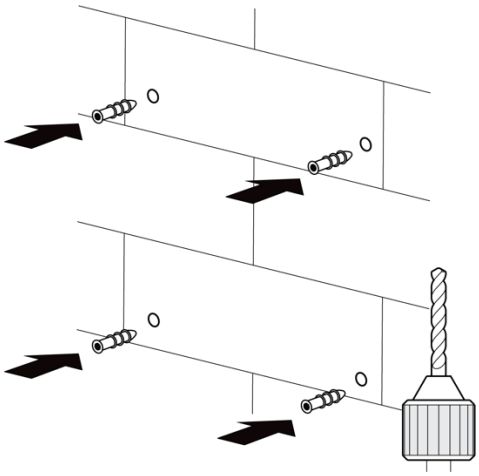

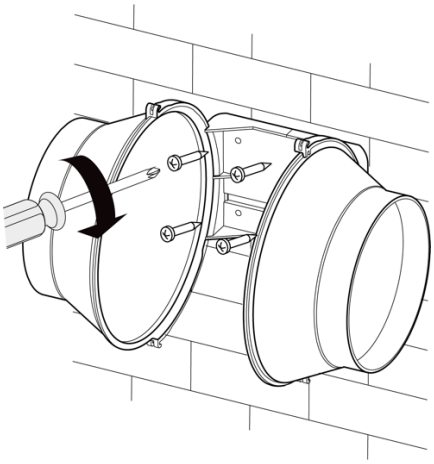

STEP 5 – Place the removable motor block with terminal box in position and fix it to the casing assembled with the spigots by means of the special clamps with latches.

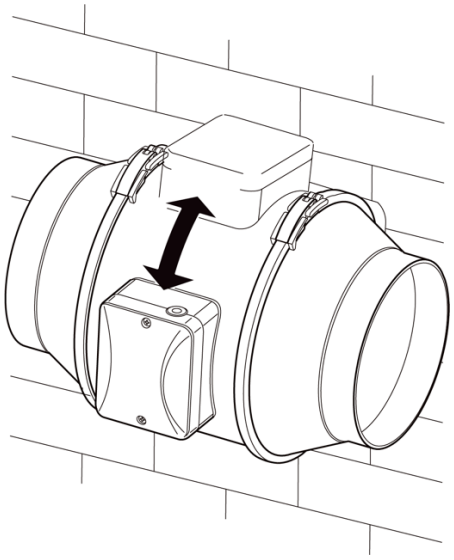

STEP 6 – Connect the fan to single-phase power mains through the automatic circuit breaker integrated into the fixed power mains. Cut power supply off prior to wireworks. The contact gap on all poles must be at least 3 mm.

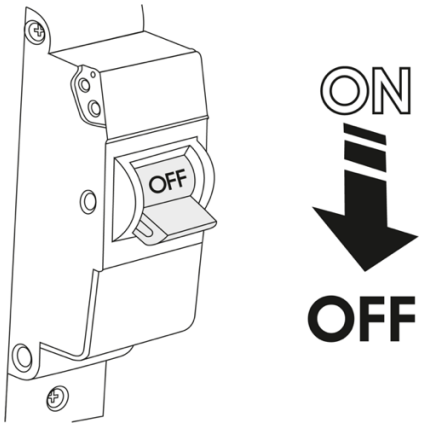

STEPS 7 - 9 ARE FOR HARDWIRED TT/TT PRO MODELS ONLY. NOT FOR SPEED SWITCH MODELS.

The TT 150 / TT Pro 200 models with a built-in three-position speed switch and a power cord with an IEC C14 connector come pre-wired and only need to be plugged in. Model is shown below.

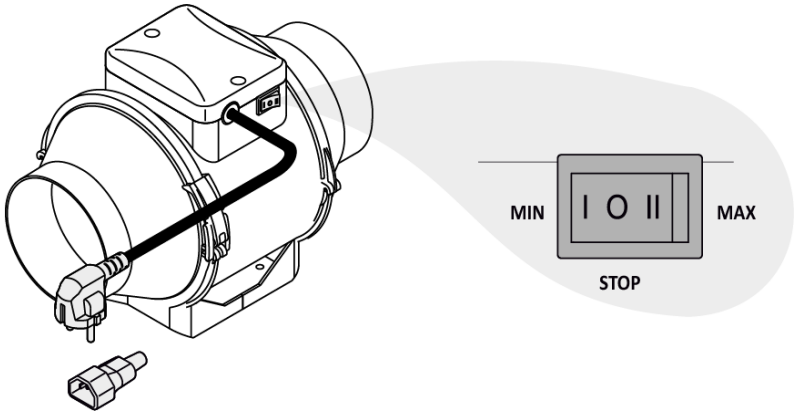

STEP 7 – Remove the cover of the fan by unscrewing the screws holding the cover in place.

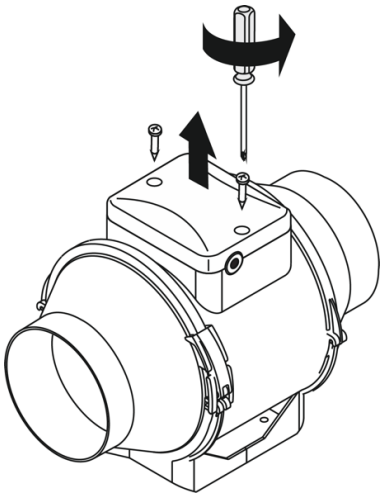

TT Model

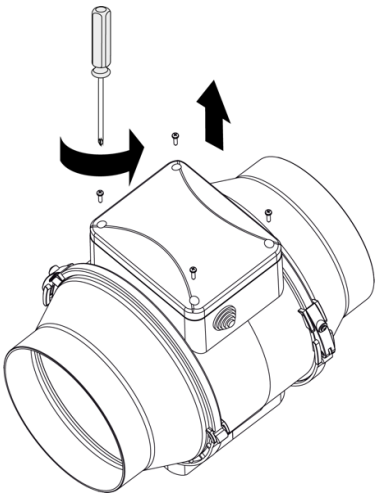

TT Pro Model

STEP 8 – Connect the power cord wires to the terminal block and assemble the fan in reverse order by following the wiring diagram.

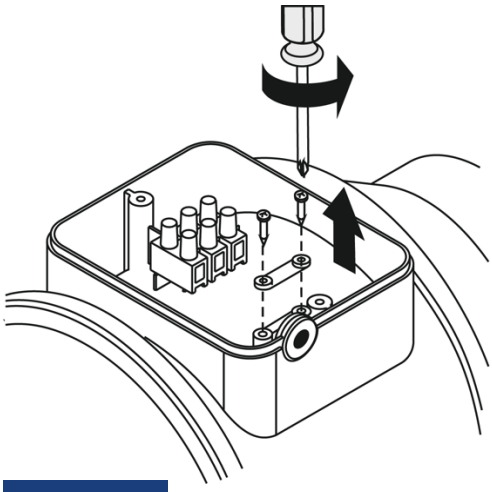

TT Model

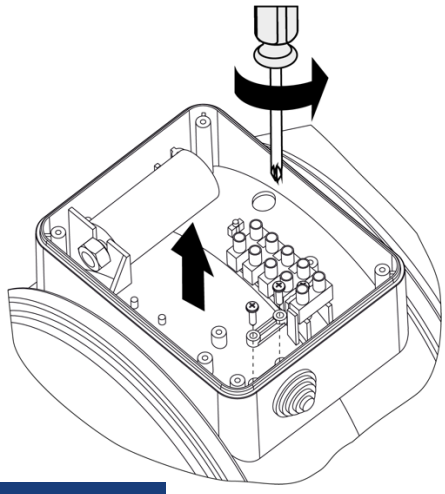

TT Pro Model

WIRING DIAGRAMS

TERMINAL DESIGNATION KEYS AT WIRING DIAGRAMS:

L - phase (only for 220-240 V power mains)

N - 0 (only for 220-240 V power mains)

S — external speed controller

L1 — minimum speed terminal

L2 — maximum speed terminal

QF — automatic circuit breaker

TT 100/125

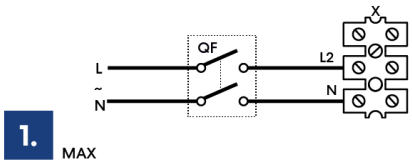

1. MAX

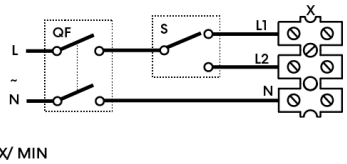

2. MAX/ MIN

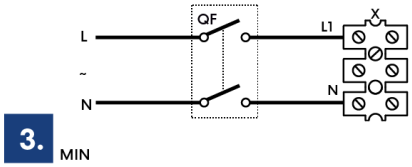

3. MIN

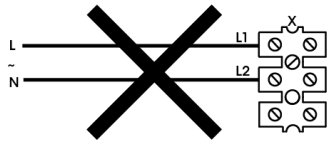

4.

TT 150

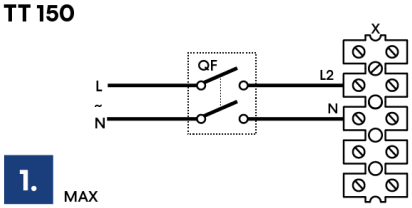

1. MAX

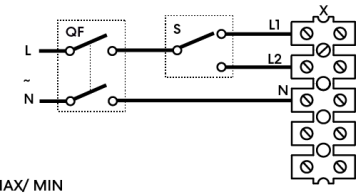

2. MAX/ MIN

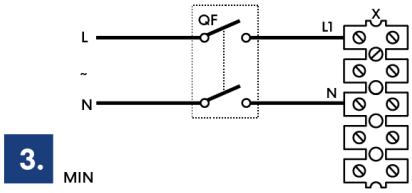

3. MIN

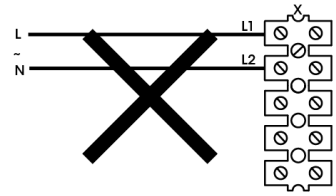

4.

TT PRO 200/250/315

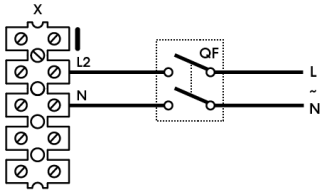

1. MAX

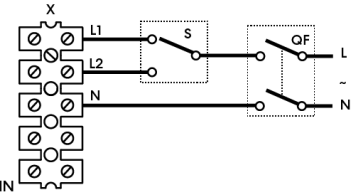

2. MAX / MIN

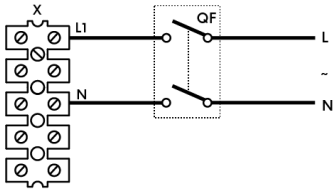

3. MIN

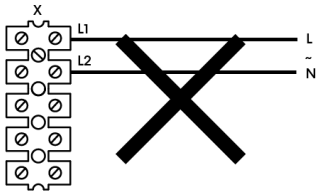

4.

STEP 9 – Cover the fan and secure the cover using the screws.

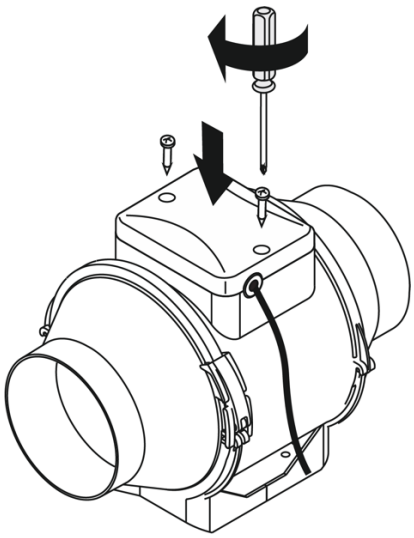

TT Model

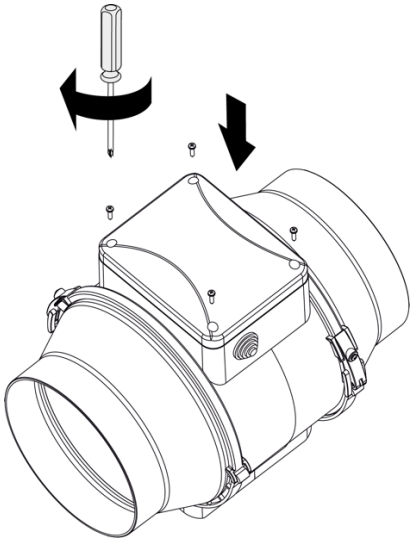

TT Pro Model

STEP 10 – Turn on mains power.

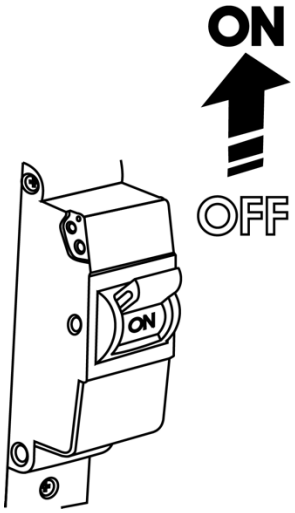

MAINTENANCE

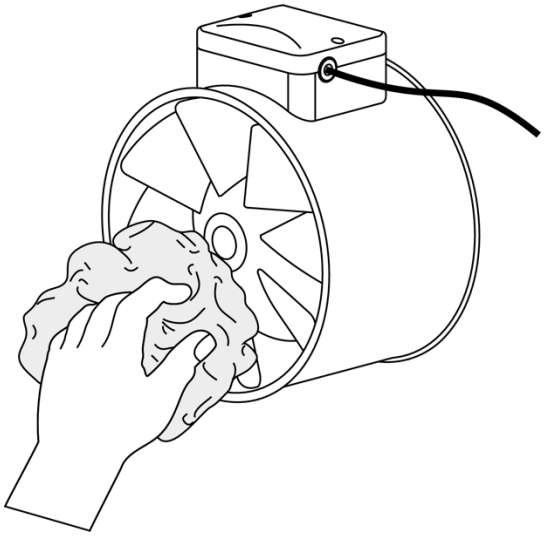

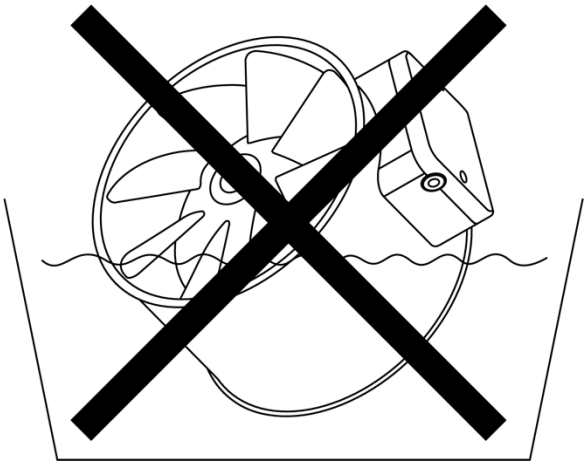

The product surfaces must be regularly cleaned from dirt and dust. Cut off power supply prior to any maintenance operations. Use a soft cloth or compressed air to remove external dust. To clean the internal parts of the fan, unscrew the special clamps with latches on the spigots and pull out the removable central motor. Thoroughly clean every 6 months using a damp cloth soaked in mild detergent and water.

Avoid water dripping on the electric components. Wipe the surfaces dry after cleaning.

STORAGE REGULATIONS

Transport the product by any transportation vehicle in the manufacturer's original package.

Store the delivered product in the manufacturer's original packing box in a dry ventilated premise with the temperature range from +5°C up to + 40°C and relative humidity less than 70%.

The storage environment must not contain dust, acid or alkali vapours that may cause corrosion of the product parts.

fanco